Brine-to-water heat pump with two performance levels

Order reference: SI 37TE

Installation location: Indoors
Flow temperature max 60 °C
Casing, powder-coated

Heat pump for heating purposes for indoor installation with WPM 2007 plus integrated control and control panel that can also be used as a wired remote control using a wall-mounting kit (special accessory). Variable connection options for brine and heating system connections on the rear wall of the casing; sound-optimised through insulated metal casing, solid-borne sound insulation for direct connection to the heating system and free-swinging compressor base plate; high COPs through economiser and compliance with the high requirements of EN 14511 for larger volume flows on the heat consumption side. Universal design with two compressors for flexible capacity, optional DHW preparation and the possibility of flexible expansion for:
- Bivalent and bivalent-renewable operating mode
- Distribution systems with unmixed and mixed heating circuits.

Integrated soft starter, protective motor switch and load contactor for brine circulating pump; external sensor (standard NTC-2), dirt filter for brine circuit included in the scope of supply. Brine package and brine circuit manifold must be ordered separately.

The heat pump complies with the valid standards and safety regulations as well as the Technical Specifications for Electrical Installations (TAB) of the electrical utility companies.

Technical data SI 37TE

Dimplex Brine-to-water heat pump with two performance levels (Low temperature)		
Order reference		**SI 37TE**
Set-up / Colour		Indoors / White (similar to RAL 9003)
Temperature operating limits for heating water / Brine		60 °C / -5 °C
Temperature operating limits for brine		-5 °C to 25 °C
Heat output / COP at B0/W50*	kW/-	1 compressors: 13,10 / 2,40 2 compressors: 34,30 / 3,10
Heat output / COP at B0/W35*	kW/-	1 compressors: 17,00 / 4,20 2 compressors: 37,20 / 4,60
Electrical nominal power consumption at B0/W35	kW	7,96
Refrigerant R404A	kg	6,80
Flow rate (heat source) at ext. pressure differential	m³/h / Pa	8.5 / 10000
Heating water flow rate with an int. pressure differential of	m³/h / Pa	3.20 / 1650
Dimensions (W x D x H)**	mm	1000 x 750 x 1660
Weight (incl. packing)	kg	371
Control voltage	V	230
Supply voltage		3/PE~400V, 50 Hz
Starting current with soft starter	A	26
Fuse	A	20
Device connections for heating		1 1/4"
Device connections for heat source		2"

* The specified values have the following meaning, e.g. B0/W35: heat source temperature 0 °C, heat outlet temperature 35 °C.
** Please note that additional space is required for pipe connections, operation and maintenance.

Description	Order ref.	Article number	Sample item	Item	Price
Heat pumps					
Brine-to-water heat pump with two performance levels	SI 37TE	352920	1		
Heat source accessories					
Brine package for brine-to-water heat pumps	SZB 400	352500	1		
Brine circuit manifold connection package	AP SVT	348900	1		
2-way brine circuit manifold	SVT 200	348910			
3-way brine circuit manifold	SVT 300	348920	1		
4-way brine circuit manifold	SVT 400	348930	3		
Brine circuit low-pressure switch	SWPR 500	337500			
Brine circuit antifreeze (20 l)	AFN 825	328610			
Brine circuit antifreeze (200 l)	AFN 824	324610	1		
Hydraulic accessories					
Floor-mounted buffer tank (200 l)	PSW 200	339830	1		
2 kW immersion heater for back-up heating	CTHK 631	336180			
2.9 kW immersion heater for back-up heating	CTHK 632	335910			
4.5 kW immersion heater for back-up heating	CTHK 633	322140			
6 kW immersion heater for back-up heating	CTHK 634	322150			
Universal buffer tank (500 l)*	PSW 500	339210			
Fan convector for heating/cooling with external thermostat*	HL 16SK	351780			
Fan convector for heating/cooling with external thermostat*	HL 26SK	351790			
Fan convector for heating/cooling with external thermostat*	HL 36SK	351800			
DHW preparation accessories					
Hot water cylinder (500 l) with temperature sensor	WWSP 900	339220	1		
6 kW flange heater for hot water cylinder	FLH 60	338060			
2/2.7/4 kW flange heater for hot water cylinder	FLHU 70	338070			
Flange heater for hot water cylinder 230 V/2.5 kW	FLH 25M	349430			
Safety valve combination	SVK 852	326660			
Solar station for hot water	SST 25	348430			
Thermostat for heating and domestic hot water	KRRV 003	322070			
Control accessories					
Remote diagnostics hardware package	RDS	353790			
Remote diagnostics hardware package (serial)	LDS	353770			
Remote diagnostics hardware package (USB)	LDS USB	353780			
Control accessories (cooling)					
Room climate control system for temperature and humidity measurement	RKS WPM	342220			
Heating/cooling on/off room temperature controller*	RTK 501	343080			
Heating/cooling on-off room temperature controller in flat switch mounting frame for flush mounting*	RTK 501 U	350960			
Start-up (no discount available)					
Heat pump (heating only) start-up	IN 01 WP	341750			

* Other specific accessories available / required

Notes:
The heat source accessories are designed for ground heat collectors according to the project planning documentation. The free compression must be checked if the dimensions deviate or if borehole heat exchangers are used.

Important information:
The combination of the components and the quantities indicated represent a non-binding sample system, which needs to be tested and individually adapted as required. Pump dimensioning must be reviewed according to the pressure loss of the system and the minimum heating water flow rate of the heat pump.

SELECTED STEPS:

1. Brine-to-water heat pump
2. Universal for customer-specific requirements
3. Heat pump and immersion heater
4. Dual differential pressureless manifold
5. 1 heating circuit for a panel or radiator heating system
6. Without cooling
7. DHW with heat pump and flange heating for thermal disinfection
8. Heat pump manager with external temperature control

Note:

The given hydraulic integration schematic is a schematic representation of the key components and serves as an aid for planning your customized system. It does not contain all the required safety devices, the components needed to maintain constant pressure, or any other additional valves which may be required for maintenance and service work as stipulated by EN 12828.
The heat pump manager settings and any external regulation system which may be connected must be adapted to the present integration diagram.

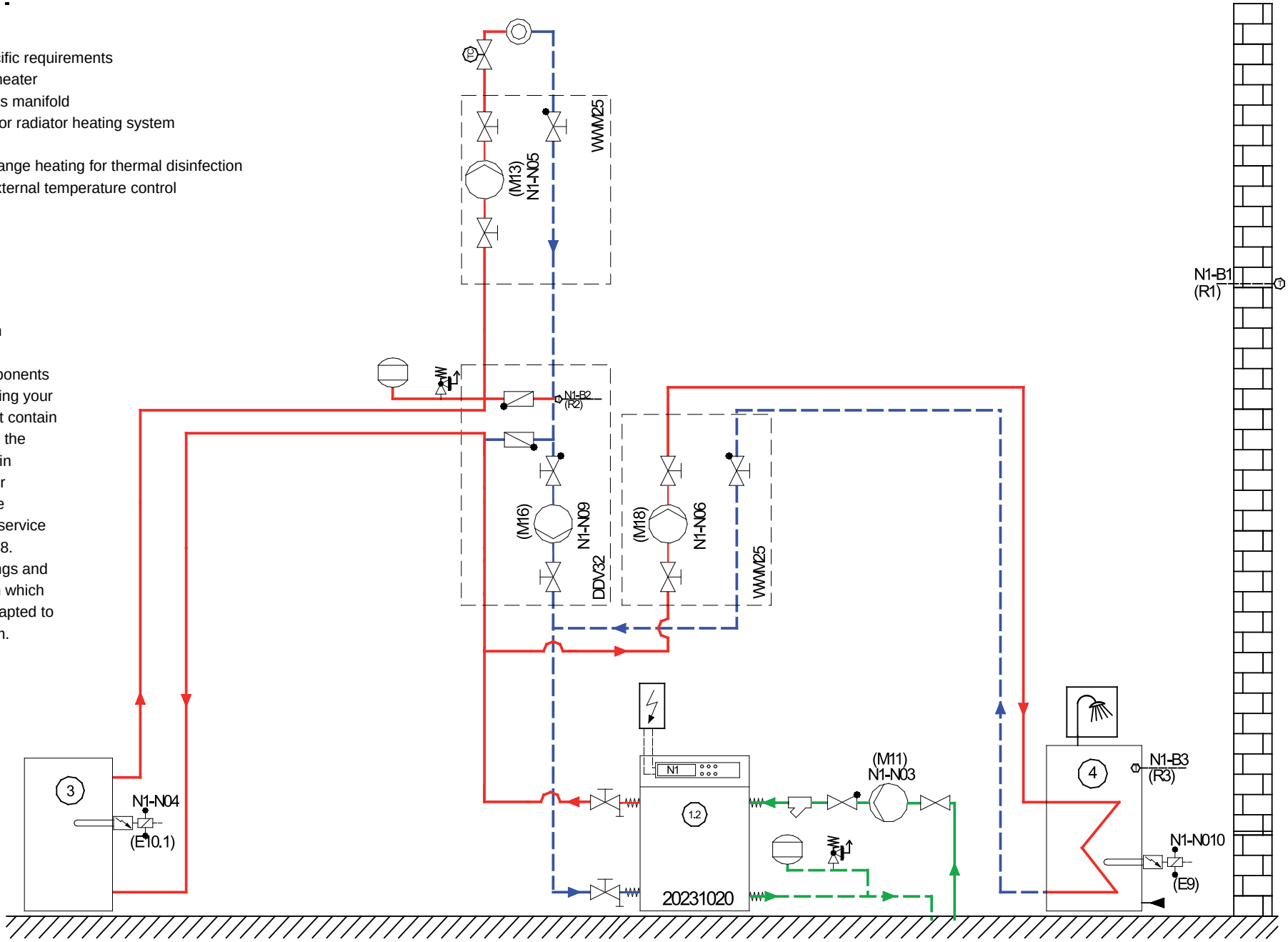

Legend:

1.	Heat Pump
1.1	Air-to-water heat pump
1.2	Brine-to-water heat pump
1.3	Water-to-water heat pump
1.4	Reversible air-to-water heat pump
1.5	Reversible brine-to-water heat pump
1.6	Reversible water-to-water heat pump
2.	Heat pump manager
3.	Buffer tank
3.1	Parallel buffer tank
4.	Hot water cylinder
5.	Swimming pool heat exchanger
6.	Passive cooling station with cooling controller N6
7.	Heating and silent or dynamic cooling
8.	Fan convector with 4-wire connection
9.	Cooling circuit only
10.	Heating circuit only
13.	Heat source

Domestic hot water distribution system:

DDV 32	Dual differential pressureless manifold (up to 2.5 m³/h)*
EB KPV	Extension module for compact manifold (up to 2.0 m³/h)*
KPV 25	Compact manifold with overflow valve (up to 1.3 m³/h)*
	In combination with EB KPV (up to 2.0 m³/h)*
MMB 25	Mixer module, bivalent (up to 2.0 m³/h)*
MMH 25	Mixer module for heating circuit
SST 25	Solar station for hot water
VTB 25	Manifold bar (up to 2.5 m³/h)*
WWM 25	Hot water module / unmixed heating circuit (up to 2.5 m³/h)*

*** Recommended max. heating waterflow**

E9	Flange heater, hot water
E10	2nd heat generator (HG2)
E10.1	Immersion heater
E10.2	Oil/gas boiler
E10.3	Solid fuel boiler
E10.5	Solar energy system
F7	Safety temperature monitor
K20	Contactor for 2nd heat generator
K21	Contactor for immersion heater hot water
M11	Primary pump for heating operation
M12	Primary pump for cooling operation
M13	Heat circulating pump for main circuit
M14	Heat circulating pump for heating circuit 1
M15	Heat circulating pump for heating circuit 2
M16	Auxiliary circulating pump
M17	Cooling circulating pump
M18	Hot water circulating pump
M19	Swimming pool water circulating pump
MA	Mixer open
MZ	Mixer closed
N1	Heating controller
N2	Cooling controller for reversible heat pumps
N3/N4	Room climate control stations
N6	Cooling controller for passive cooling
N12	Solar controller
R1	External wall sensor
R2	Return flow sensor
R3	Hot water sensor
R4	Return flow sensor for cooling water
R5	Temperature sensor for heating circuit 2
R9	Flow sensor (antifreeze)
R11	Flow sensor for cooling water
R13	Sensor for heating circuit 3 / bivalent-renewable
TC	Room temperature controller
Y5	Three-way distribution valve
Y6	Two-way valve
Y7	Three-way mixing valve
Y8	Three-way valve (closing time max. 10 sec.)

Glen Dimplex Deutschland GmbH
Dimplex Division
Am Goldenen Feld 18
95326 Kulmbach

Subject to change and errors!
E-mail: dimplex@dimplex.de
Internet: www.dimplex.de

Internet: 26.07.2007

Phone: +49 (0)9221 709-201
Fax: +49 (0)9221 709-339